Special Mounting Parts Q.C. Baffle – H&B-System for 5 1/2" SG / DG

Description	IS-Part No.	H&B-Order No.
Mounting Parts Q.C. Baffle		H&B-95550-1
Mounting Parts Q.C. Baffle		H&B-95550-2

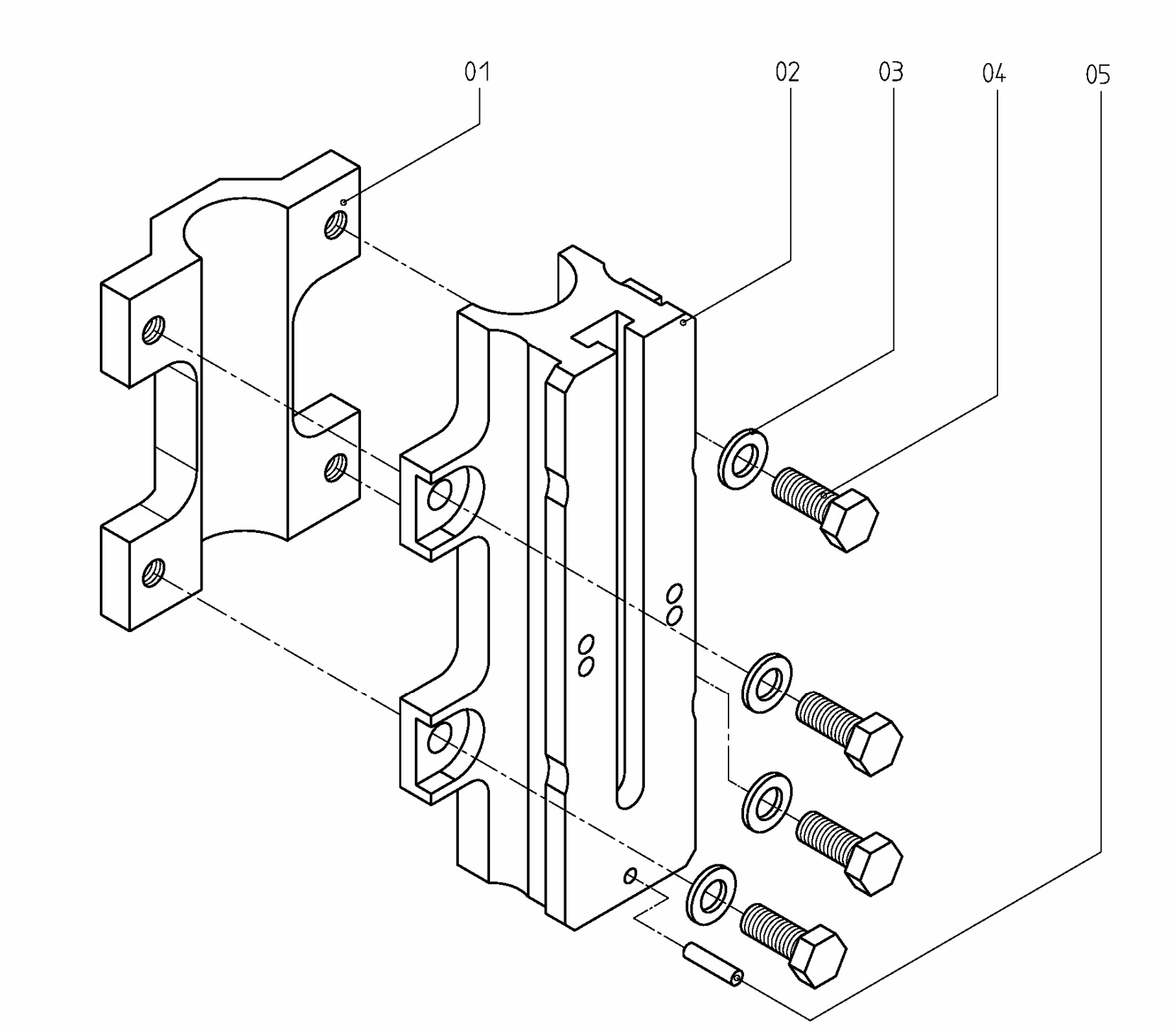

Note :
use H&B-95550-1 for Baffle Piston & Rods with 1 3/4" DIA.
use H&B-95550-2 for Baffle Piston & Rods with 1 1/2" DIA.

Gr.2	Gr.1	Qty.	Description	IS Part No.	H&B Order No.	Index	Note
x	x	1	Parallel Pin		DIN-6325-6x20	6	
x	x	4	Hex Hd.Cap Screw		DIN-933-1/2“UNC x 11/2“	4	
x	x	4	Washer		DIN-125-13	3	
x		1	Baffle Arm Holder		H&B-95550-004	2	
	x	1	Baffle Arm Holder		H&B-95550-003	2	
x		1	Cap		H&B-95550-006	1	
	x	1	Cap		H&B-95550-005	1	

Zust.	Änderung	Datum	Name		Datum	Name
				Gez.		
				Gep.		

Benennung : **Mounting Parts Baffle**

Hartmann & Bender Vertriebs - und Produktions - GmbH Hauptstraße 70 72 Walluf am Rhein

Zeichnungs- Nr.: **H&B-955550-1 H&B-955550-2**

Special Q.C. Baffle Arm DG (H&B-System for 5 1/2")

Description	IS-Part No.	H&B-Order No.
Q.C. Baffle Arm DG 5 1/2"		H&B-1435-002

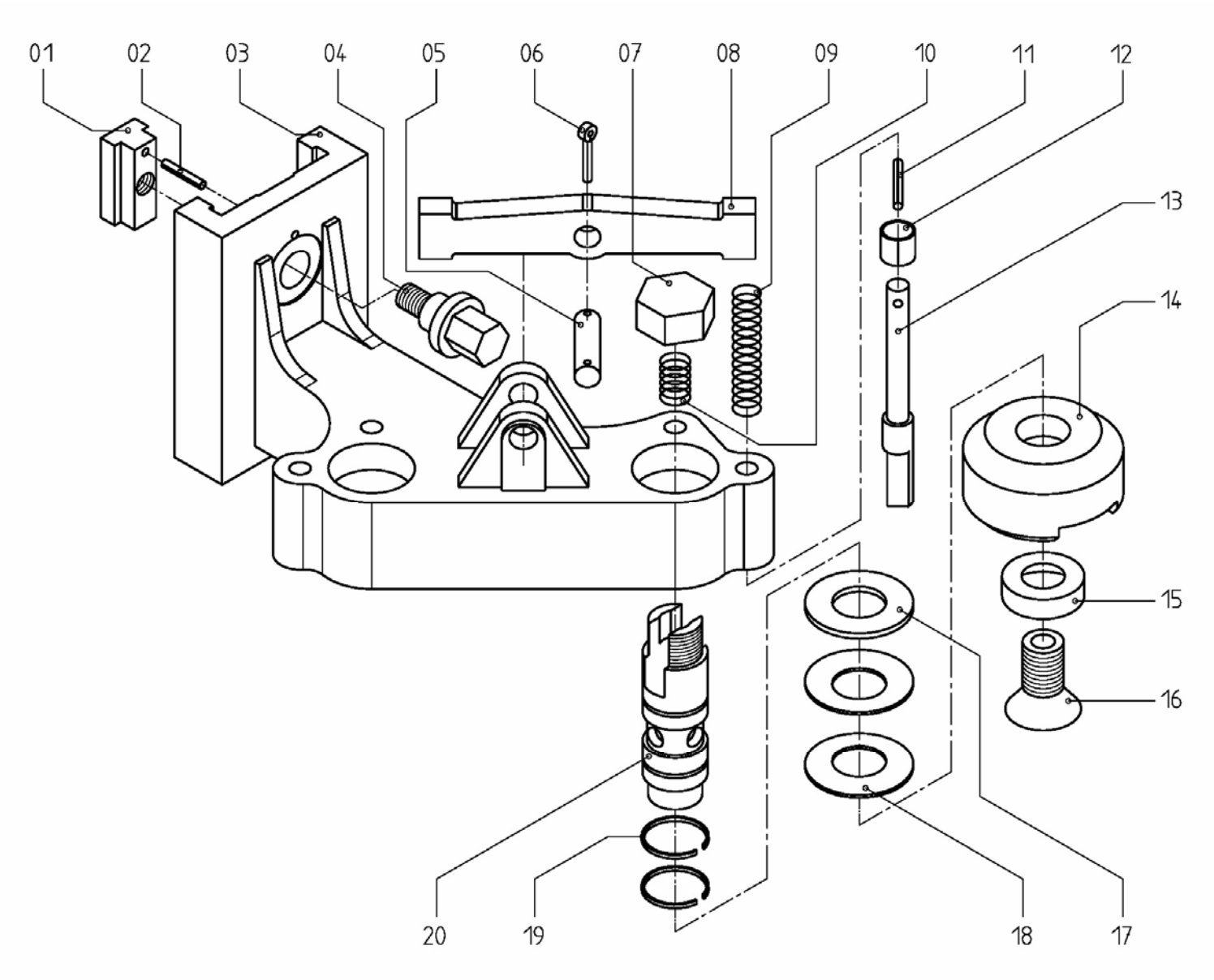

2	Retainer Stud	191-24429	0791-24429	20	
4	Piston Ring	2520-531	9520-531	19	
4	Conical Spring Washer	59-20524	0759-20524	18	
2	Washer, hardened	3360-257	7360-257	17	
2	Screw	48-88437	0748-88437	16	
2	Washer	191-24433	0791-24433	15	
2	Lock Ring	191-25691	0791-25691	14	
2	Position Pin	191-24436	0791-24436	13	
4	Bushing self lubricated	59-20528	0759-20528	12	
2	Straight Pin		DIN-1481-5 x 30	11	
2	Compression Spring	191-24467	0791-24467	10	
2	Compression Spring	191-24466	0791-24466	9	
1	Equalizer	23-5327	0723-5327	8	
2	Cap	191-24431	0791-24431	7	
2	Cotter Pin	2060-98	DIN-94-3,2 x 20	6	
1	Bolt	191-24437	0791-24437	5	
1	Clamping Bolt		H&B-95430	4	
1	Baffle Holder DG		G-27330	3	
1	Straight Pin		DIN-1481-3 x 24	2	
1	Locating Block		H&B-95431	1	
Qty.	**Description**	**IS Part No.**	**H&B Order No.**	**Index**	**Note**

				Datum	**Name**	**Benennung :**
			Gez.			**Special Q.C. Baffle Arm DG**
			Gep.			**(H&B-System for 5 1/2")**
			Hartmann & Bender			**Zeichnungs- Nr.:**
			Vertriebs – und			
			Produktions - GmbH			**H&B-1435-002**
			Hauptstraße 70			
Änderung	Datum	Name	**65396 Walluf am Rhein**			

Special Q.C. Baffle Arm SG (H&B-System for 5 1/2")

Description	IS-Part No.	H&B-Order No.
Q.C. Baffle Arm SG 5 1/2"		H&B-1435-005

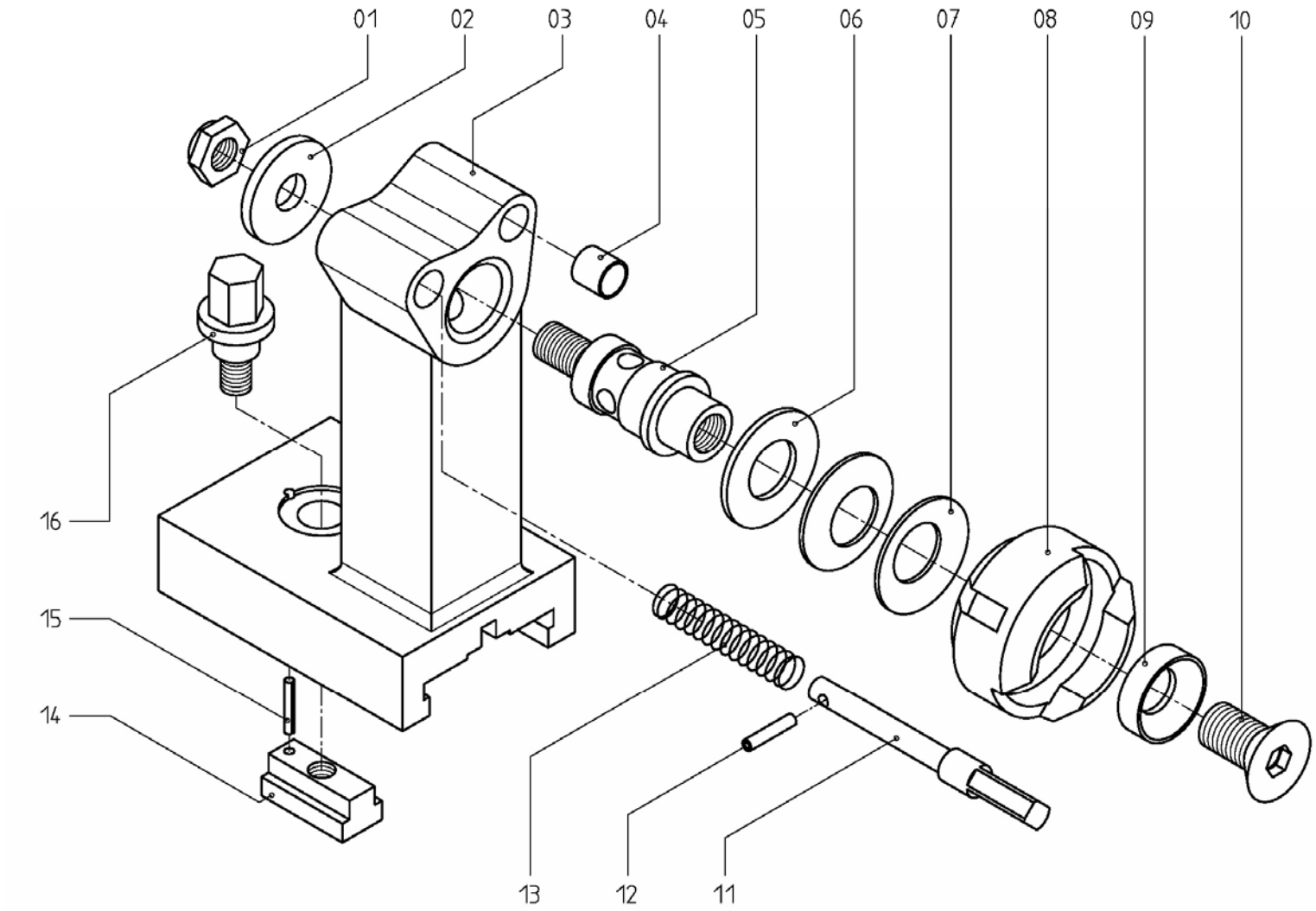

1	Clamping Bolt		H&B-95430	16	
1	Straight Pin		DIN-1481-3 x 24	15	
1	Locating Block		H&B-95431	14	
1	Compression Spring	191-24466	0791-24466	13	
1	Straight Pin		DIN-1481-5 x 30	12	
1	Position Pin	191-24436	0791-24436	11	
1	Screw	48-88437	0748-88437	10	
1	Washer	191-24433	0791-24433	9	
1	Lock Ring	191-25691	0791-25691	8	
2	Conical Spring Washer	59-94605	0759-94605	7	
1	Washer, hardened	3360-257	7360-257	6	
1	Retainer Stud	191-24709	0791-24709	5	
2	Bushing self lubricated	59-20528	0759-20528	4	
1	Baffle Holder SG		1284-133	3	
1	Washer	3360-273	7360-273	2	
1	Hex Nut		DIN-980-5/8”UNC	1	
Qty.	**Description**	**IS Part No.**	**H&B Order No.**	**Index**	**Note**

				Datum	**Name**	**Benennung :**
			Gez.			**Special Q.C. Baffle Arm SG**
			Gep.			**(H&B-System for 5 1/2")**
			Hartmann & Bender			**Zeichnungs- Nr.:**
			Vertriebs – und			**H&B-1435-005**
			Produktions - GmbH			
			Hauptstraße 70			
Änderung	Datum	Name	**65396 Walluf am Rhein**			

Special Mounting Parts Q.C. Funnel – H&B-System for 5 1/2" SG / DG

Description	IS-Part No.	H&B-Order No.
Mounting Parts Q.C. Funnel		H&B-97550-1

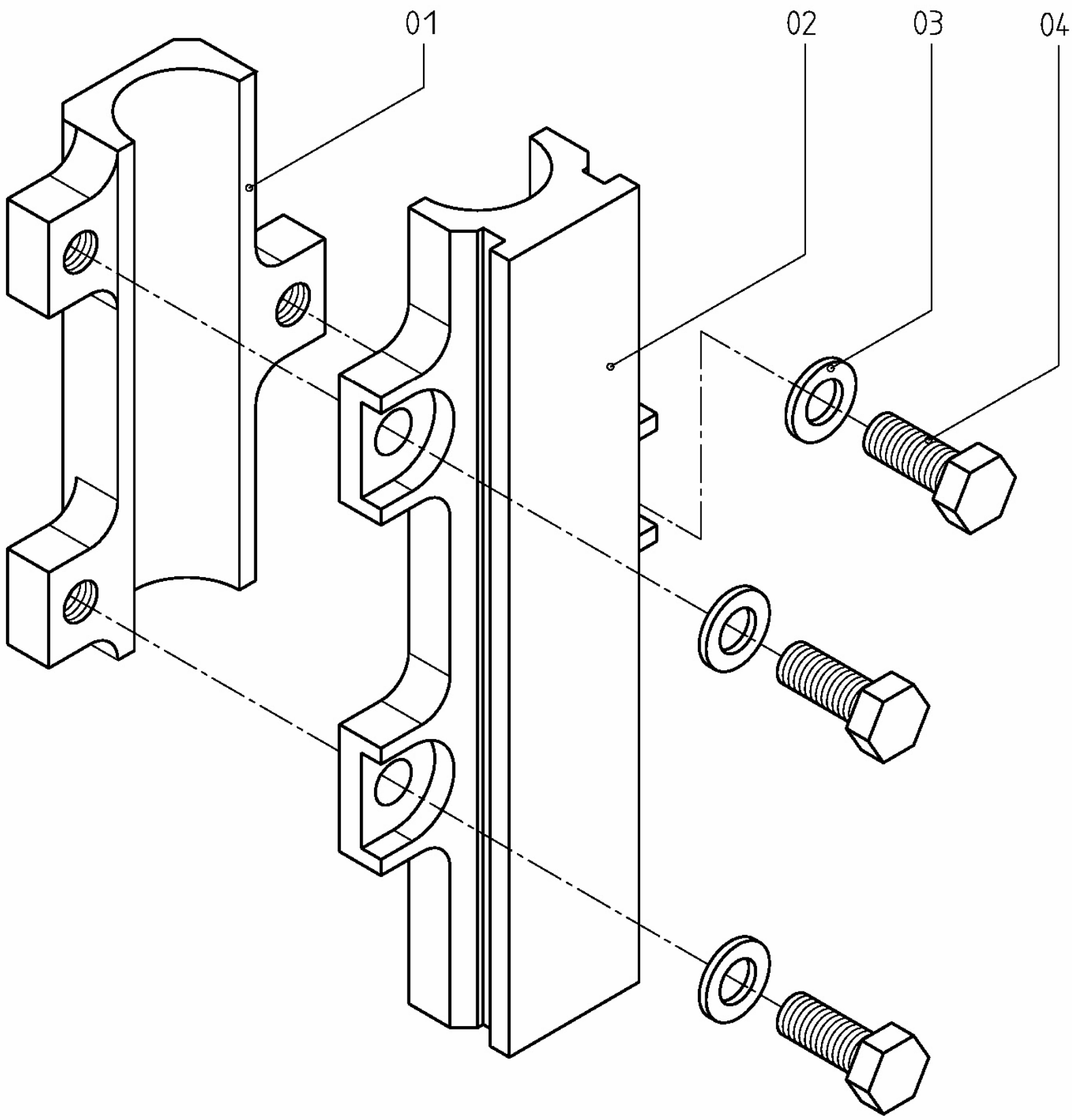

4	Hex Hd.Cap Screw					DIN-933-1/2“UNC x 11/4“	4	
4	Washer					DIN-125-13	3	
1	Baffle Arm Holder					H&B-95550-003	2	
1	Cap					H&B-95550-005	1	
Qty.	**Description**				**IS Part No.**	**H&B Order No.**	**Index**	**Note**
				Datum	**Name**	**Benennung :**		
			Gez.			**Mounting Parts Funnle**		
			Gep.					
			Hartmann & Bender Vertriebs – und Produktions - GmbH Hauptstraße 70 65396 Walluf am Rhein			**Zeichnungs- Nr.:** **H&B-97550-1**		
Änderung	Datum	Name						

Special Q.C. Funnel Arms DG (H&B-System for 5 1/2")

Description	IS-Part No.	H&B-Order No.
Q.C.Funnel Arm DG 5 1/2" 3 1/2" DIA – Funnel No.2		H&B-1429-002
Q.C.Funnel Arm DG 5 1/2" 4 7/16" DIA – Funnel No.3		H&B-1429-003
Q.C.Funnel Arm DG 5 1/2" 3 3/16" DIA – Funnel No.2 A		H&B-1429-004

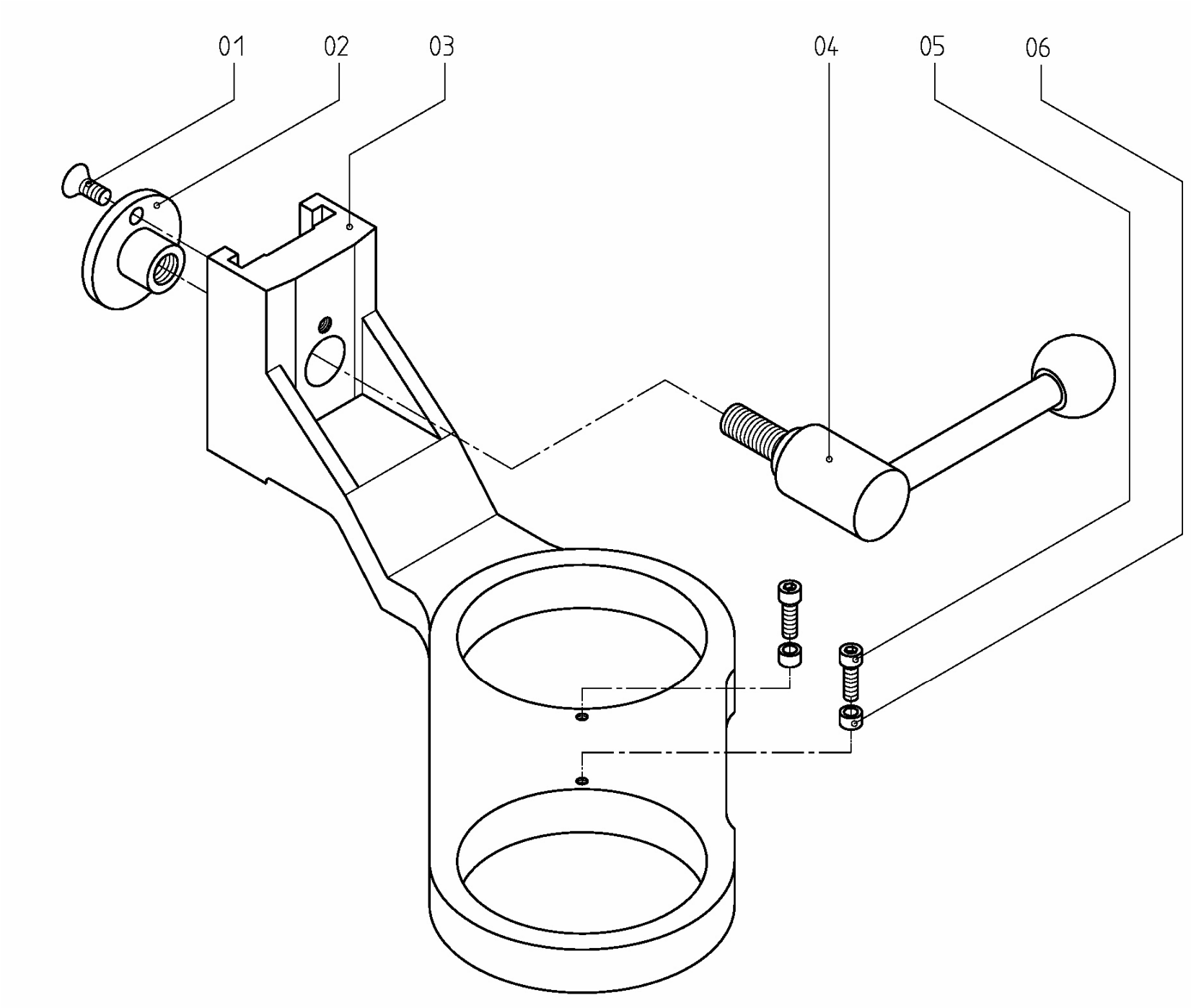

	x	x	x	2	Spacing Bushing		H&B-02063	6	
	x	x	x	2	Hex.Soc.Hd.Cap Screw		DIN-912-10-24NC x 3/4	5	
	x	x	x	1	Handle Adjustable	59-94603	0759-94603	4	
	x			1	Funnel Holder - 3 3/16" DIA		1284-134-A	3	
		x		1	Funnel Holder - 4 7/16" DIA		1284-135	3	
			x	1	Funnel Holder - 3 1/2" DIA		1284-134	3	
	x	x	x	1	Bushing	191-26477	0791-26477	2	
	x	x	x	1	Count.Sc.Hd.Screw		DIN-7991-1/4“NC x 3/4“	1	
	004	**003**	**002**	**Qty.**	**Description**	**IS Part No.**	**H&B Order No.**	**Index**	**Note**

						Datum	**Name**	**Benennung :**
					Gez.			**Special Q.C. Funnel Arm DG (H&B-System for 5 1/2")**
					Gep.			
					Hartmann & Bender Vertriebs - und Produktions - GmbH Hauptstraße 70 - 72 Walluf am Rhein			**Zeichnungs- Nr.:** **H&B-1429-002 H&B-1429-003 H&B-1429-004**
	Zust.	Änderung	Datum	Name				

Special Q.C. Funnel Arms SG (H&B-System for 5 1/2")

Description	IS-Part No.	H&B-Order No.
Q.C.Funnel Arm SG 5 1/2" 3 1/2" DIA – Funnel No.2		H&B-1429-008
Q.C.Funnel Arm SG 5 1/2" 4 7/16" DIA – Funnel No.3		H&B-1429-009
Q.C.Funnel Arm SG 5 1/2" 5 3/16" DIA – Funnel No.4		H&B-1429-010
Q.C.Funnel Arm DG 5 1/2" 3 3/16" DIA – Funnel No.2 A		H&B-1429-011

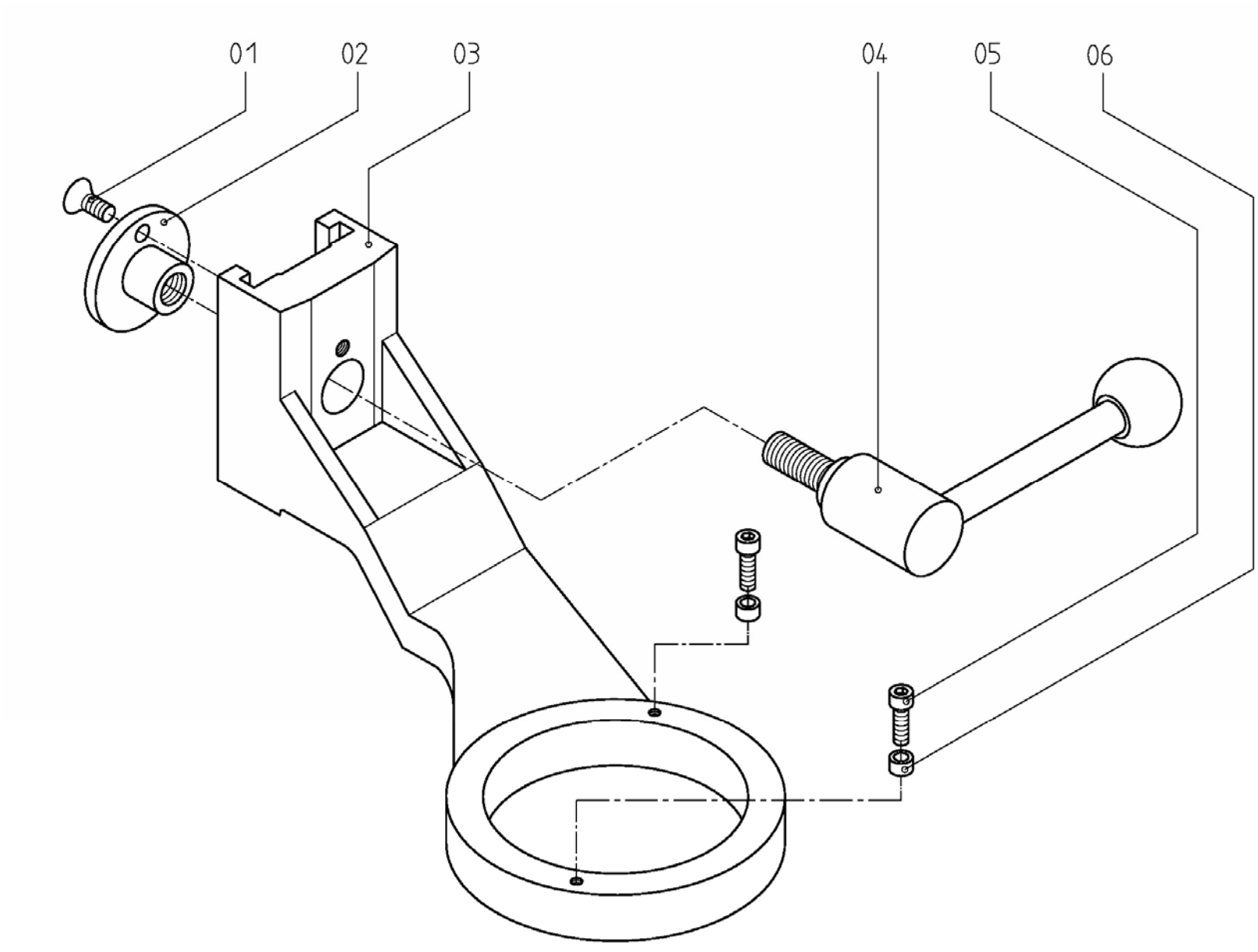

011	010	009	008	Qty.	Description	IS Part No.	H&B Order No.	Index	Note
x	x	x	x	2	Spacing Bushing		H&B-02063	6	
x	x	x	x	2	Hex.Soc.Hd.Cap Screw		DIN-912-10-24NC x 3/4	5	
x	x	x	x	1	Handle Adjustable	59-94603	0759-94603	4	
x				1	Funnel Holder - 3 3/16" DIA		1284-131-A	3	
	x				Funnel Holder - 5 3/16" DIA		1284-132-A	3	
		x		1	Funnel Holder - 4 7/16" DIA		1284-132	3	
			x	1	Funnel Holder - 3 1/2" DIA		1284-131	3	
x	x	x	x	1	Bushing	191-26477	0791-26477	2	
x	x	x	x	1	Count.Sc.Hd.Screw		DIN-7991-1/4“NC x 3/4“	1	

Zust.	Änderung	Datum	Name

	Datum	Name
Gez.		
Gep.		

Benennung :
Special Q.C. Funnel Arm SG (H&B-System for 5 1/2")

Hartmann & Bender Vertriebs - und Produktions - GmbH Hauptstraße 70 - 72 Walluf am Rhein

Zeichnungs- Nr.:
H&B-1429-008
H&B-1429-009
H&B-1429-010
H&B-1429-011

Special Mounting Parts Q.C. Blow Head – H&B-System for 5 1/2" SG / DG

Description	IS-Part No.	H&B-Order No.
Mounting Parts Q.C. Funnel		H&B-96550-1

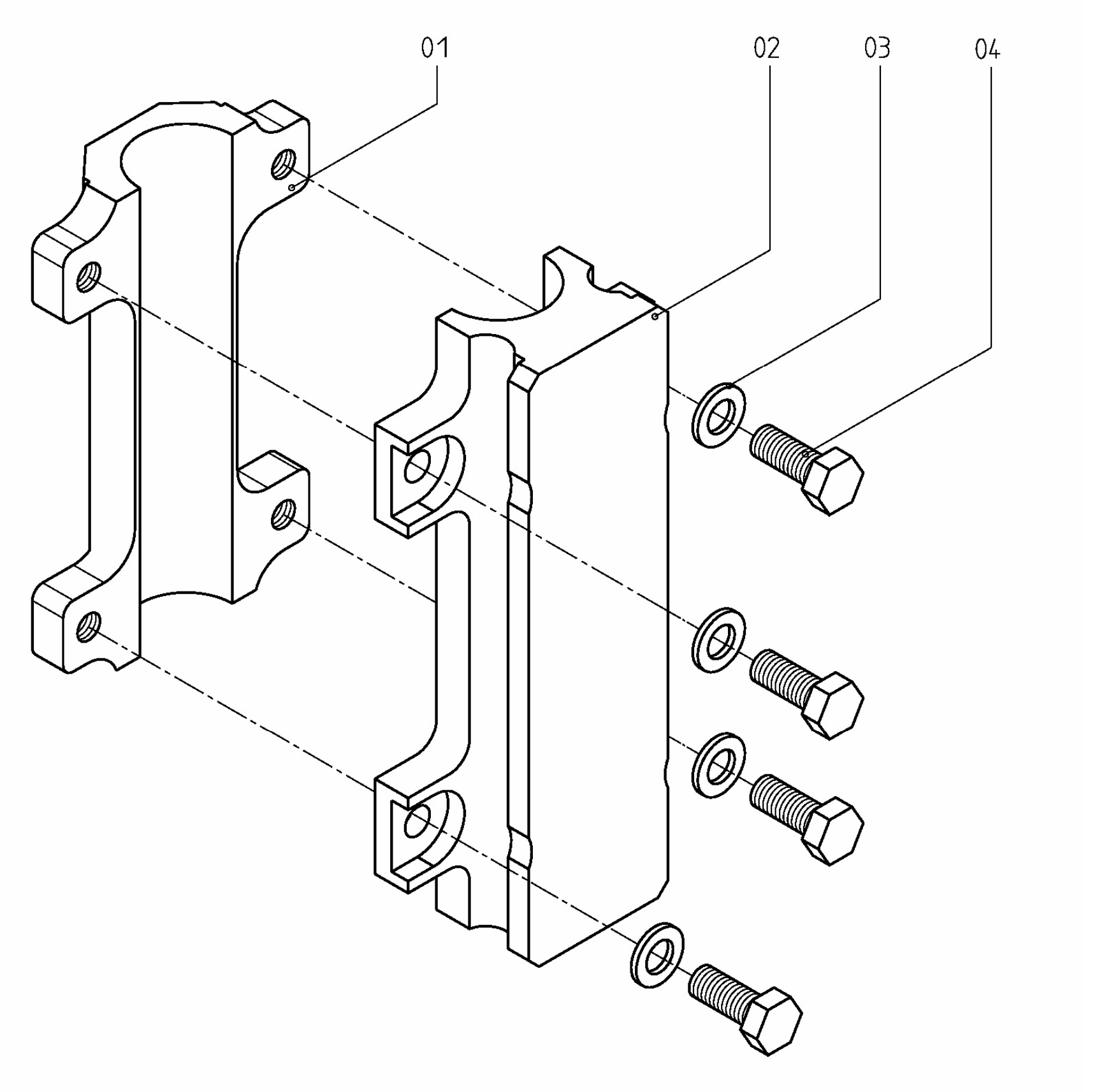

4	Hex Hd.Cap Screw				DIN-933-1/2“UNC x 11/4“	4	
4	Washer				DIN-125-13	3	
1	Baffle Arm Holder				H&B-96550-003	2	
1	Cap				H&B-96550-005	1	
Qty.	**Description**			**IS Part No.**	**H&B Order No.**	**Index**	**Note**
				Datum	**Name**	**Benennung :** **Mounting Parts Blow Head**	
			Gez.				
			Gep.				
			Hartmann & Bender Vertriebs – und Produktions - GmbH Hauptstraße 70 65396 Walluf am Rhein			**Zeichnungs- Nr.:** **H&B-96550-1**	
Änderung	Datum	Name					

Standard Q.C. Blow Head Arms DG (using H&B-System for 5 1/2")

Description	IS-Part No.	H&B-Order No.
Q.C. Blow Head Arm DG 5 1/2" Thread Type	200-202 Gr. 3	7200-202 - 3
Q.C. Blow Head Arm DG 5 1/2" Thread Type	200-202 Gr.15	7200-202 -15
Q.C. Blow Head Arm DG 5 1/2" Bayonet Type	200-202 Gr. 7	7200-202 - 7
Q.C. Blow Head Arm DG 5 1/2" Bayonet Type	200-202 Gr.19	7200-202 -19

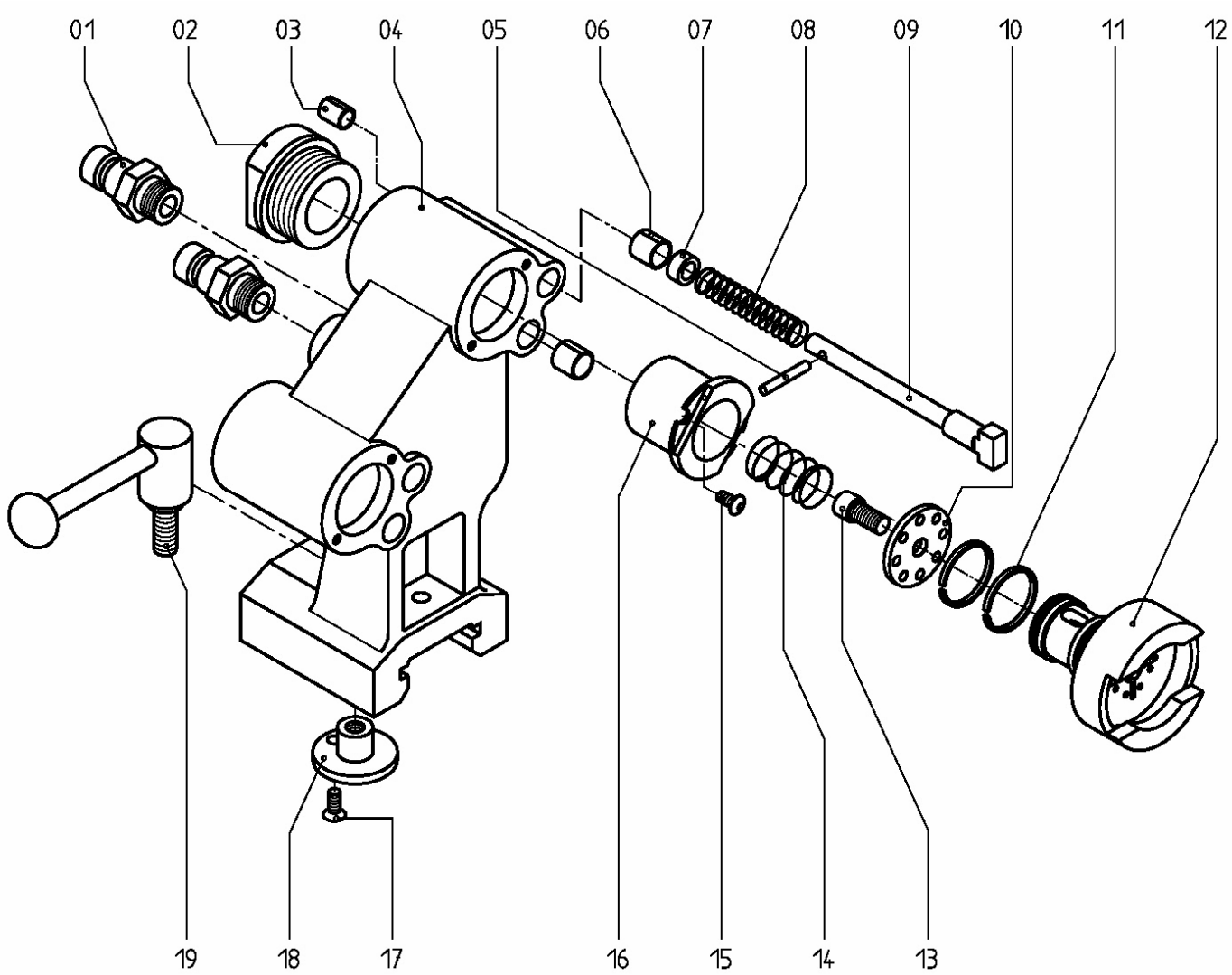

200-202 Gr.19 Bayonet Type is shown

Gr.19	Gr.7	Gr.15	Gr.3	Qty.	Description	IS Part No.	H&B Order No.	Index	Note
x	x	x	x	1	Handle Adjustable	59-94603	0759-94603	19	
x	x	x	x	1	Bushing	191-26477	0791-26477	18	
x	x	x	x	1	Count.Sc.Hd.Screw		DIN-7991-1/4”NC x 5/8”	17	
x	x	x	x	2	Bushing	191-26494	0791-26494	16	
x	x	x	x	4	Button Soc. Cap Screw	2640-1620	ISO-7380- M 6 x 12	15	
x	x	x	x	2	Compression Spring	59-75011	0759-75011	14	
x	x	x	x	2	Hex. Soc.Hd.Cap Screw		DIN-912-3/8” NC x 3/4”	13	
x	x			2	Lock Ring (Bayonet Type)	191-26490	0791-26490	12	
		x	x	2	Lock Ring (Thread Type)	191-26491	0791-26491	12	
x	x	x	x	4	Piston Ring	2520-30	9520-30	11	
x	x	x	x	2	Washer	191-26495	0791-26495	10	
x	x			2	Piston Pin (Bayonet Type)	191-26749	0791-26749	9	
		x	x	2	Piston Pin (Thread Type)	191-26748	0791-26748	9	
x	x	x	x	2	Compression Spring	191-24466	0791-24466	8	
x	x	x	x	2	Distance Washer	191-26776	0791-26776	7	
x	x	x	x	4	Bushing , self lubricated	59-20528	0759-20528	6	141615 F
x	x	x	x	2	Straight Pin DIN 1481		DIN-1481-5 x 26	5	
x	x	x	x	1	Blow Head Arm Body DG 5 1/2"	191-26756	0791-26756	4	
x	x	x	x	4	Bushing, self lubricated	59-20545	0759-20545	3	101215 F
x	x	x	x	2	Retainer	191-26493	0791-26793	2	
x		x			Q.C.Connector Male MD	1460-828	7460-828	1	
	x		x	2	Connector Male	1460-444	7460-444	1	LP-012-1-WR021-11

Zust.	Änderung	Datum	Name		Datum	Name
				Gez.		
				Gep.		

Benennung :
Blow Head Arm Q.C.
DG 5 1/2”

Hartmann & Bender
Vertriebs - und
Produktions - GmbH
Hauptstraße 70 - 72
Walluf am Rhein

Zeichnungs- Nr.:
7200-202 - 3 Thread Type
7200-202 -15 Thread Type
7200-202 -7 Bayonet Type
7200-202 -19 Bayonet Type

Standard Q.C. Blow Head Arms SG (using H&B-System for 5 1/2")

Description	IS-Part No.	H&B-Order No.
Q.C. Blow Head Arm DG 5 1/2" Thread Type	200-201 Gr. 3	7200-201 - 3
Q.C. Blow Head Arm DG 5 1/2" Thread Type	200-201 Gr.15	7200-201 -15
Q.C. Blow Head Arm DG 5 1/2" Bayonet Type	200-201 Gr. 7	7200-201 - 7
Q.C. Blow Head Arm DG 5 1/2" Bayonet Type	200-201 Gr.19	7200-201 -19

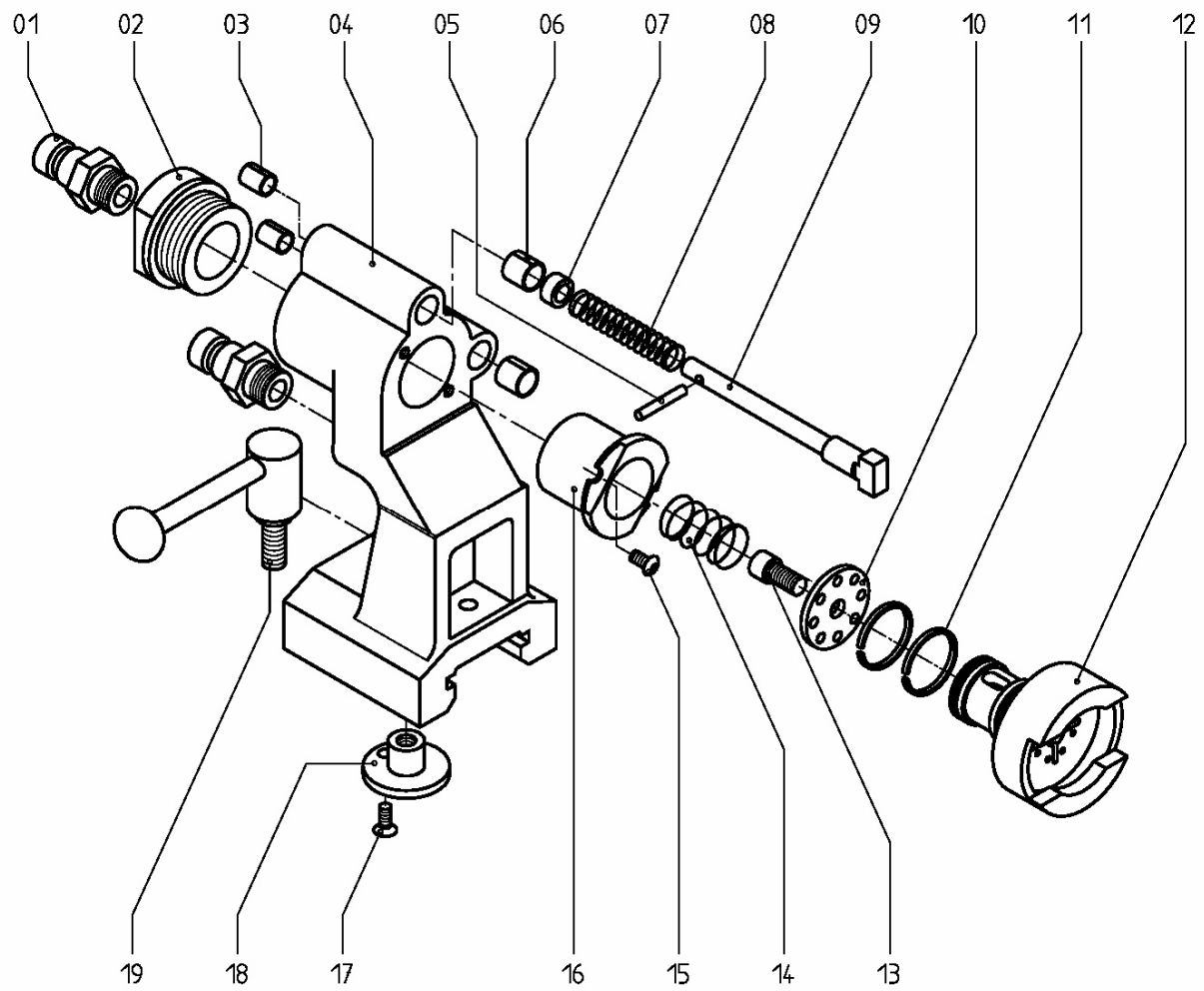

200-201 Gr.19 Bayonet Type is shown

Gr.19	Gr.7	Gr.15	Gr.3	Qty.	Description	IS Part No.	H&B Order No.	Index	Note
x	x	x	x	1	Handle Adjustable	59-94603	0759-94603	19	
x	x	x	x	1	Bushing	191-26477	0791-26477	18	
x	x	x	x	1	Count.Sc.Hd.Screw		DIN-7991-1/4”NC x 5/8”	17	
x	x	x	x	1	Bushing	191-26494	0791-26494	16	
x	x	x	x	2	Button Soc. Cap Screw	2640-1620	ISO-7380- M 6 x 12	15	
x	x	x	x	1	Compression Spring	59-75011	0759-75011	14	
x	x	x	x	1	Hex. Soc.Hd.Cap Screw		DIN-912-3/8” NC x 3/4”	13	
x	x			1	Lock Ring (Bayonet Type)	191-26490	0791-26490	12	
		x	x	1	Lock Ring (Thread Type)	191-26491	0791-26491	12	
x	x	x	x	2	Piston Ring	2520-30	9520-30	11	
x	x	x	x	1	Washer	191-26495	0791-26495	10	
x	x			1	Piston Pin (Bayonet Type)	191-26749	0791-26749	9	
		x	x	1	Piston Pin (Thread Type)	191-26748	0791-26748	9	
x	x	x	x	1	Compression Spring	191-24466	0791-24466	8	
x	x	x	x	1	Distance Washer	191-26776	0791-26776	7	
x	x	x	x	2	Bushing , self lubricated	59-20528	0759-20528	6	141615 F
x	x	x	x	1	Straight Pin DIN 1481		DIN-1481-5 x 26	5	
x		x		1	Blow Head Arm Body SG 5 1/2”	191-26755	0791-26755	4	
x	x	x	x	2	Bushing, self lubricated	59-20545	0759-20545	3	101215 F
x	x	x	x	1	Retainer	191-26493	0791-26793	2	
x		x		1	Q.C.Connector Male MD	1460-828	7460-828	1	
	x		x	1	Connector Male	1460-444	7460-444	1	LP-012-1-WR021-11

Zust.	Änderung	Datum	Name		Datum	Name
				Gez.		
				Gep.		

Benennung :
Blow Head Arm Q.C.
SG 5 1/2”

Hartmann & Bender
Vertriebs - und
Produktions - GmbH
Hauptstraße 70 - 72
Walluf am Rhein

Zeichnungs- Nr.:
7200-201 - 3 Thread Type
7200-201 -13 Thread Type
7200-201 - 7 Bayonet Type
7200-201 -19 Bayonet Type

Spring Loaded Lock Rings & Pressure Plates

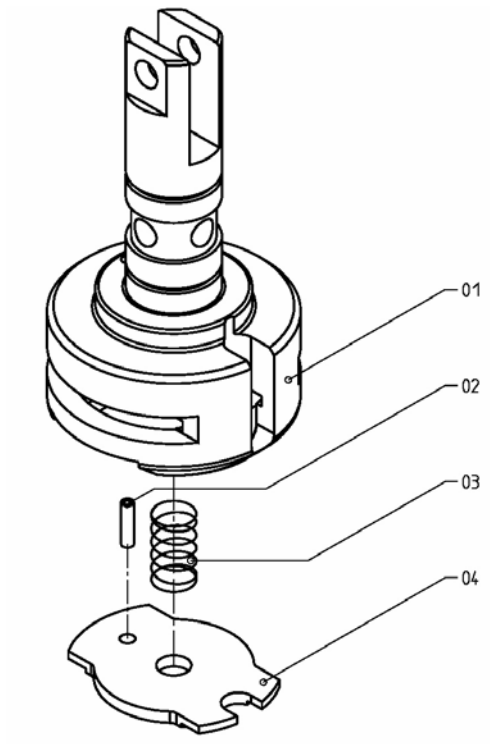

1	Pressure Plate				H&B-02178-2	4	
1	Compression Spring				H&B-43504	3	
1	Straight Pin				DIN-1481- 4 x 16	2	
1	Lock Ring				H&B-02288-01	1	
Qty.	**Description**				**IS Part No.**	**H&B Order No.**	**Index**	**Note**

				Datum	**Name**	**Benennung :**
			Gez.			**Center Spring Loaded Lock Ring & Pressure Plate**
			Gep.			
			Hartmann & Bender Vertriebs – und Produktions - GmbH Hauptstraße 70 65396 Walluf am Rhein			**Zeichnungs- Nr.:** **H&B-02288** **using for TG 4 1/4" Q.C. Baffle Arms**
Änderung	Datum	Name				

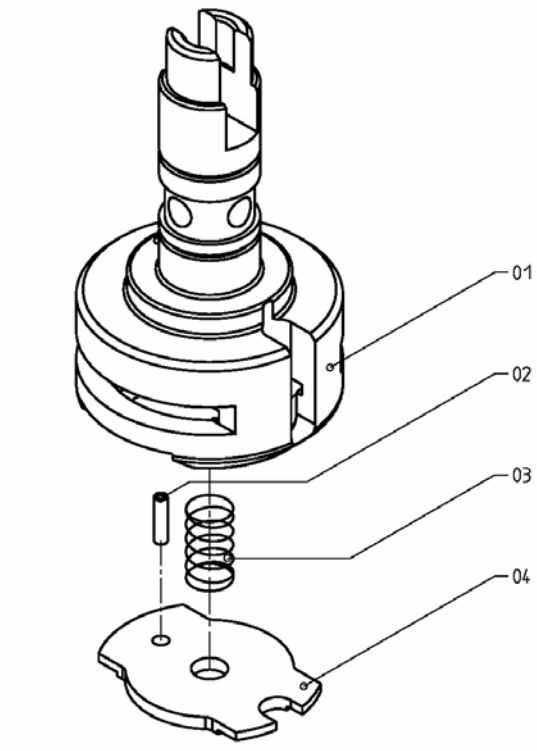

1	Pressure Plate				H&B-02178-2	4	
1	Compression Spring				H&B-43504	3	
1	Straight Pin				DIN-1481- 4 x 16	2	
1	Lock Ring				H&B-02289-01	1	
Qty.	**Description**				**IS Part No.**	**H&B Order No.**	**Index**	**Note**

				Datum	**Name**	**Benennung :**
			Gez.			**Spring Loaded Lock Ring & Pressure Plate outside mounted**
			Gep.			
			Hartmann & Bender Vertriebs – und Produktions - GmbH Hauptstraße 70 65396 Walluf am Rhein			**Zeichnungs- Nr.:** **H&B-02289** **using for TG 4 1/4" Q.C. Baffle Arms**
Änderung	Datum	Name				

Spring Loaded Lock Rings & Pressure Plates

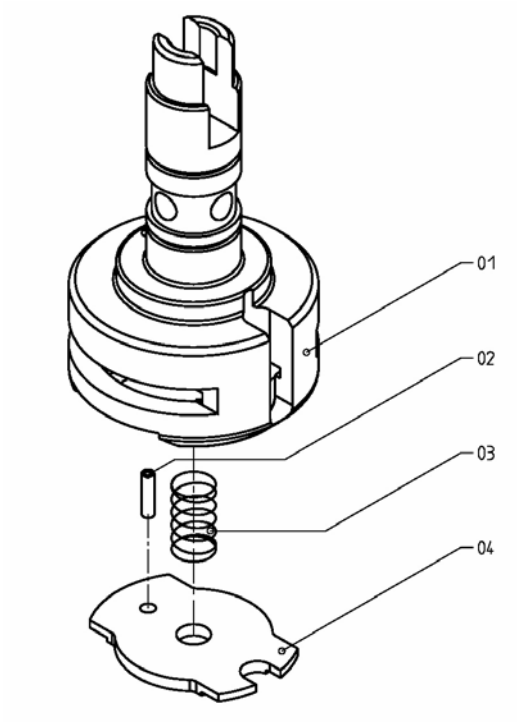

1	Pressure Plate		H&B-02178-2	4	
1	Compression Spring		H&B-43504	3	
1	Straight Pin		DIN-1481- 4 x 16	2	
1	Lock Ring		H&B-02177-01	1	
Qty.	**Description**	**IS Part No.**	**H&B Order No.**	**Index**	**Note**

				Datum	**Name**	**Benennung :** **Spring Loaded Lock Ring & Pressure Plate**
			Gez.			
			Gep.			
			Hartmann & Bender Vertriebs – und Produktions - GmbH Hauptstraße 70 65396 Walluf am Rhein			**Zeichnungs- Nr.:** **H&B-02177** **using for all Q.C. Baffle Arms DG**
Änderung	Datum	Name				

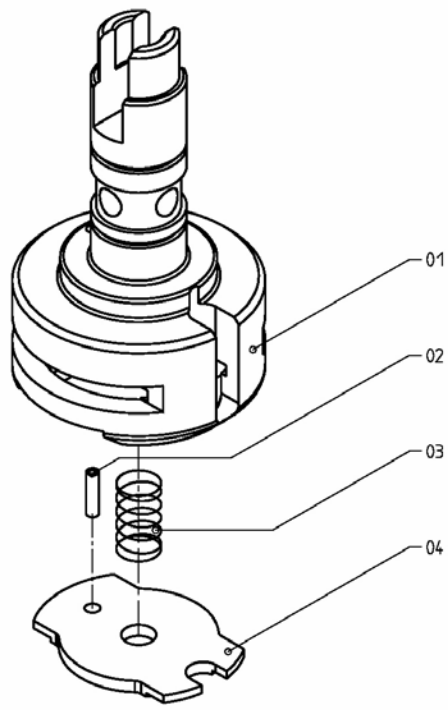

1	Pressure Plate		H&B-02178-2	4	
1	Compression Spring		H&B-43504	3	
1	Straight Pin		DIN-1481- 4 x 16	2	
1	Lock Ring		H&B-02289-01	1	
Qty.	**Description**	**IS Part No.**	**H&B Order No.**	**Index**	**Note**

				Datum	**Name**	**Benennung :** **Spring Loaded Lock Ring & Pressure Plate milled slot for Equalizer 90° turned**
			Gez.			
			Gep.			
			Hartmann & Bender Vertriebs – und Produktions - GmbH Hauptstraße 70 65396 Walluf am Rhein			**Zeichnungs- Nr.:** **H&B-02178** **using for Q.C. Baffle Arms DG**
Änderung	Datum	Name				

Spring Loaded Lock Rings & Pressure Plates

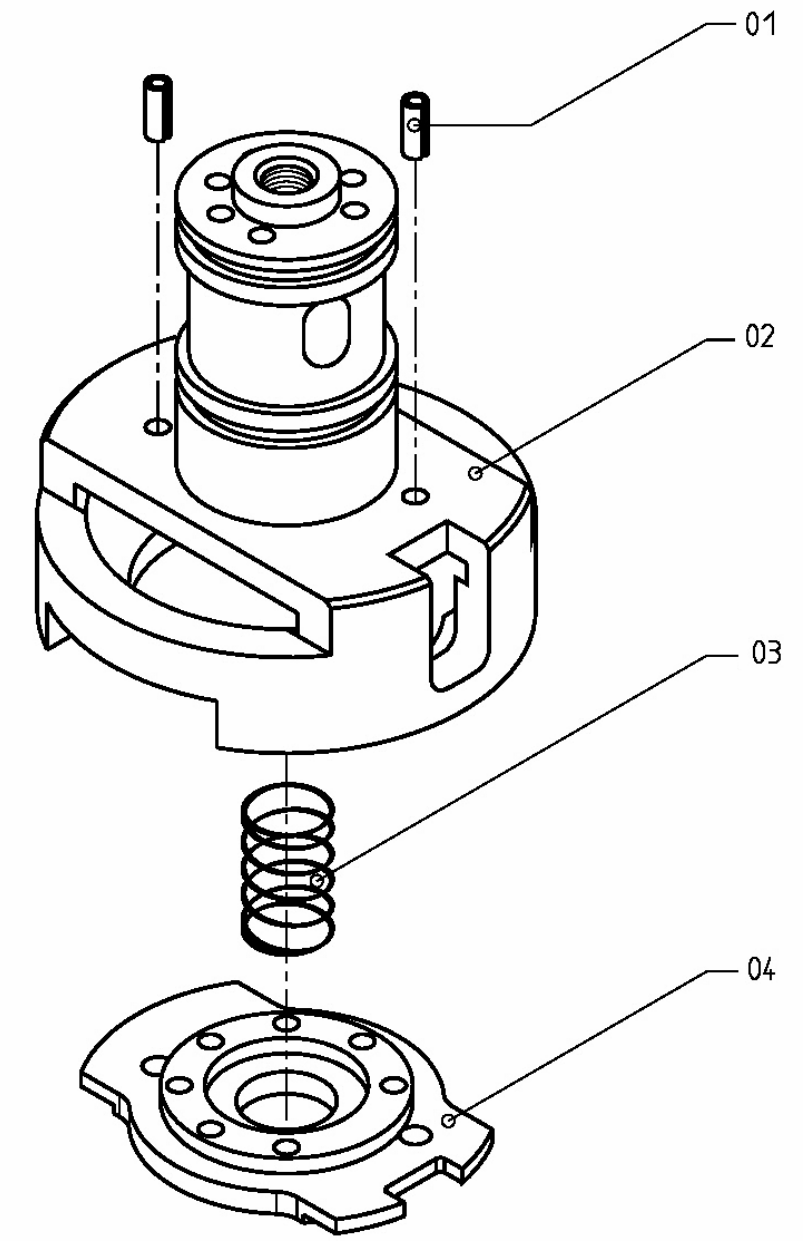

1	Pressure Plate				0791-26490-02	4	
1	Compression Spring				H&B-43504	3	
2	Straight Pin				DIN-1481- 4 x 10	2	
1	Lock Ring				0791-26490-01	1	
Qty.	**Description**			**IS Part No.**	**H&B Order No.**	**Index**	**Note**
				Datum	**Name**	**Benennung :**	
			Gez.			**Spring Loaded Lock Ring & Pressure Plate**	
			Gep.				
			Hartmann & Bender Vertriebs – und Produktions - GmbH Hauptstraße 70 65396 Walluf am Rhein			**Zeichnungs- Nr.:** **0791-26490-A using for all Q.C. Blow Head Arms SG / DG - Bayonet Type and TG 4 1/4" – Bayonet Type**	
Änderung	Datum	Name					

Spring Loaded Lock Rings & Pressure Plates

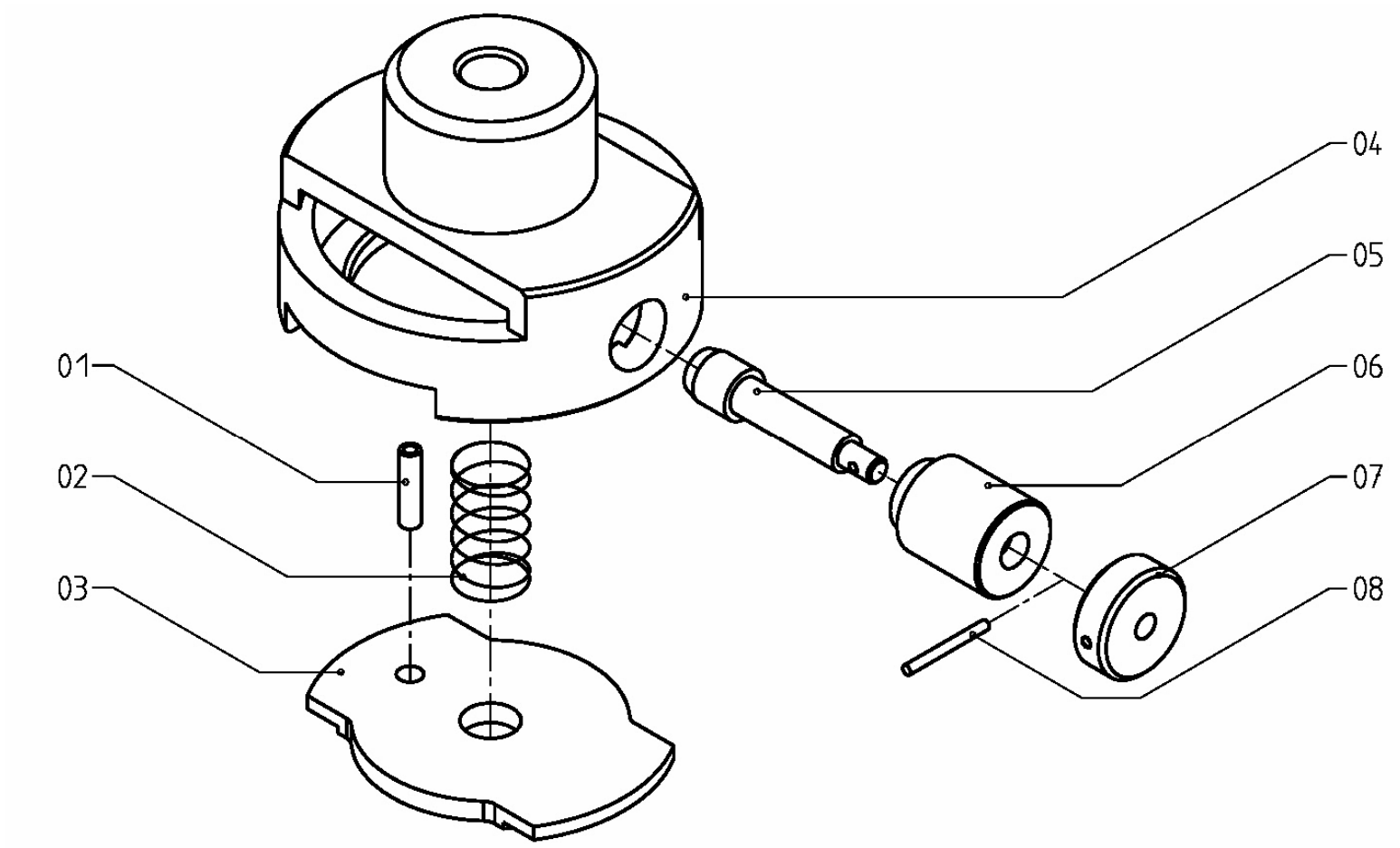

1	Compression Spring			H&B-02152		not illustrated
1	Straight Pin			DIN-1481-2,5 x 20	8	
1	Knob			H&B-02150	7	
1	Welding Bushing			H&B-02151	6	
1	Pin			H&B-02153	5	
1	Lock Ring			H&B-02290-01	4	
1	Pressure Plate			0791-10835-2	3	
1	Compression Spring			H&B-43504	2	
1	Straight Pin			DIN-1481- 4 x 10	1	
Qty.	**Description**			**IS Part No.**	**H&B Order No.**	**Index**	**Note**

				Datum	**Name**	**Benennung :**
			Gez.			**Spring Loaded Lock Ring & Pressure Plate**
			Gep.			
			Hartmann & Bender Vertriebs – und Produktions - GmbH Hauptstraße 70 65396 Walluf am Rhein			**Zeichnungs- Nr.:** **H&B-02290 using for Baffle Arms SG 4 1/4" Type 0791-5211-4**
Änderung	Datum	Name				

Spring Loaded Lock Rings & Pressure Plates

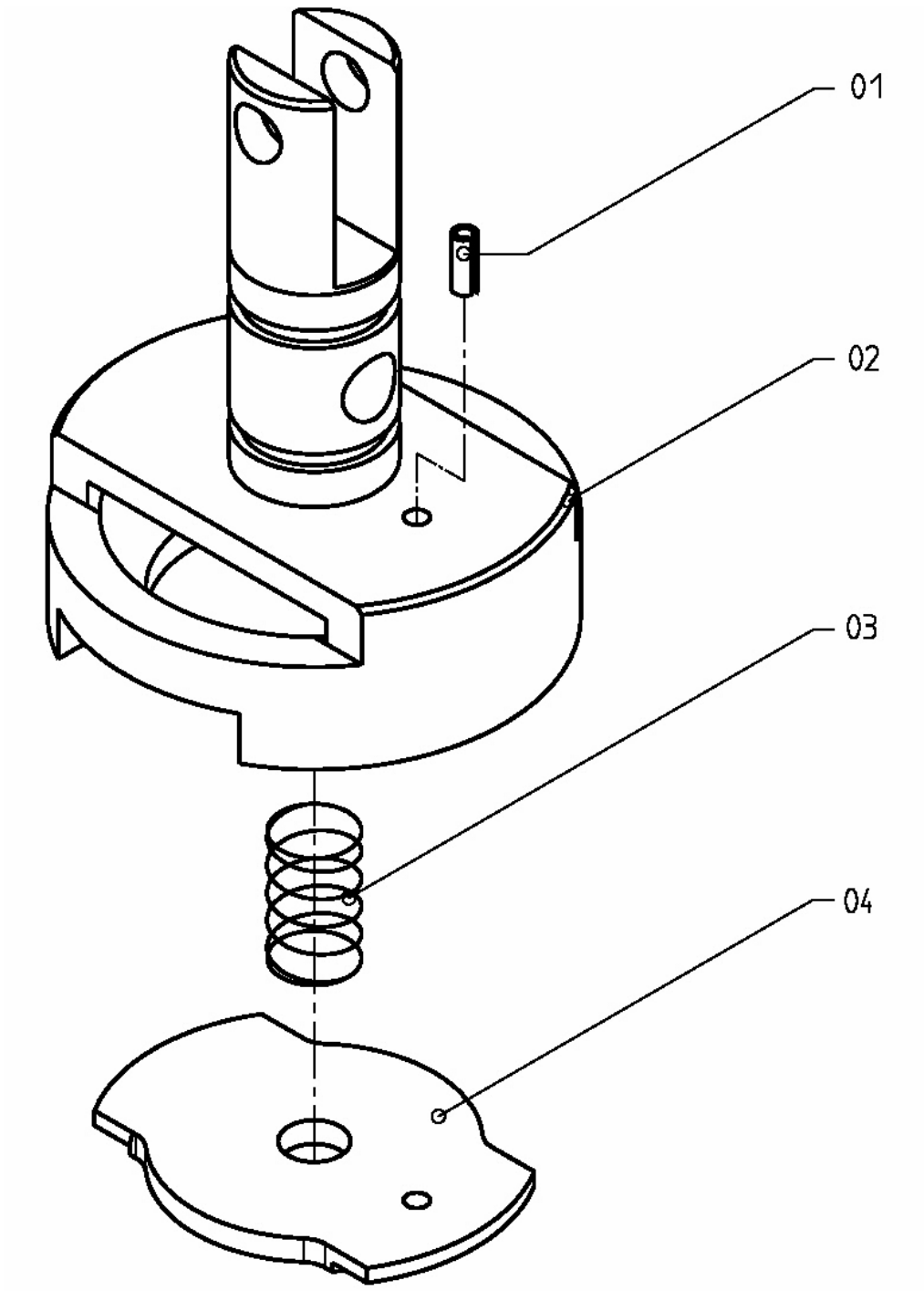

x		1		Pressure Plate	0791-21569-02	4	not illustrated
	x	1		Pressure Plate	0791-10835-02	4	
x	x	1		Compression Spring	H&B-43504	3	
x		1		Lock Ring	0791-21569-01	2	not illustrated
	x	1		Lock Ring	0791-10835-01	2	
x	x	1		Straight Pin	DIN-1481- 4 x 16	1	
0791-21569-A	**0791-10835-A**	**Qty**		**Description**	**H&B Order No.**	**Index**	**Note**

				Datum	**Name**	**Benennung :**
			Gez.			**Spring Loaded Lock Ring & Pressure Plate**
			Gep.			
			Hartmann & Bender Vertriebs – und Produktions - GmbH Hauptstraße 70 65396 Walluf am Rhein			**Zeichnungs- Nr.:** **0791-10835-A** **0791-21569-A** **using for Standard Baffle Arms DG**
Änderung	Datum	Name				